REVISIONS				
ZONE	REV.	DESCRIPTION	DATE	APPROVED
	A	RELEASED FOR PRODUCTION	11/8/2021	DMM

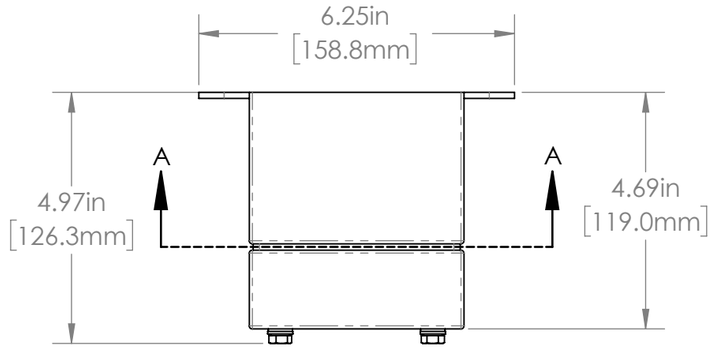

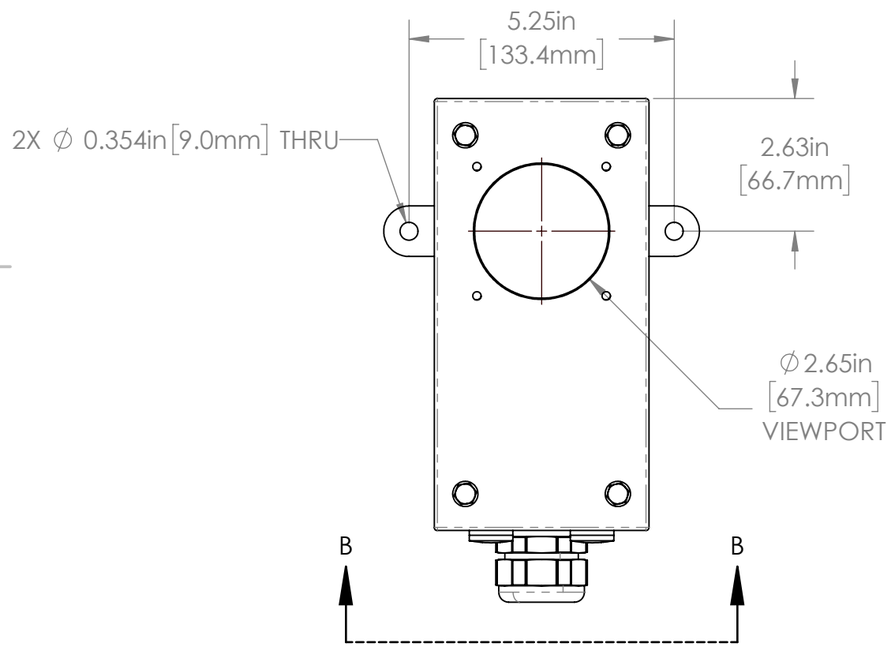

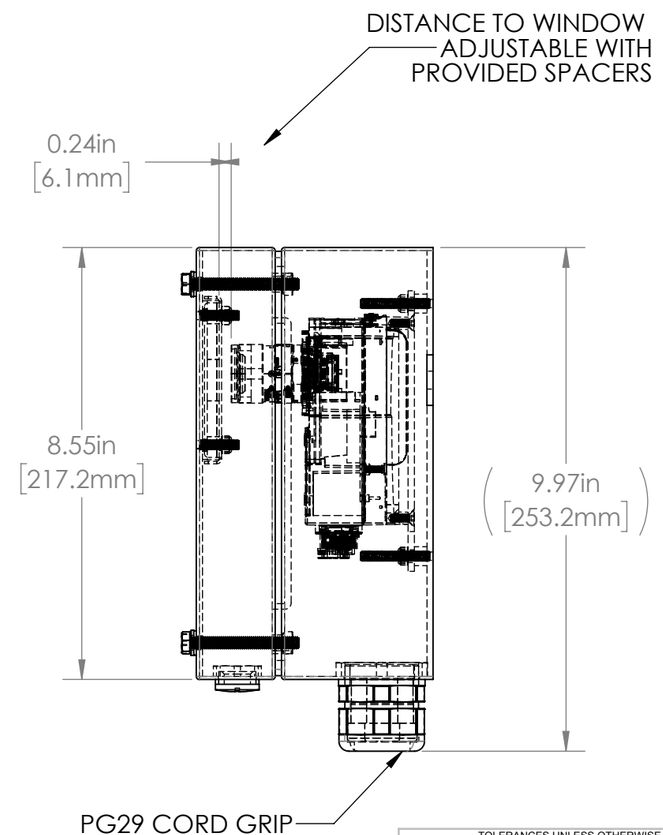

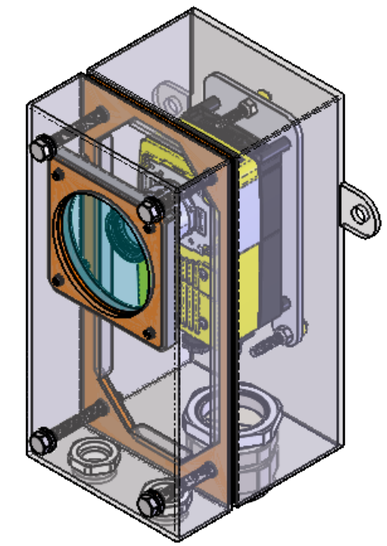

L7 SERIES PROPERTIES TABLE

ENVIRONMENT RATING	IP68*	
	(*RATING MAY CHANGE IF INSTALLER MILLS CABLE GLAND OUTSIDE OF TOLERANCE)	
COMPONENT	**MATERIAL**	**FINISH**
BODY	316 SS	BURNISHED
VIEWPORT	CLEAR FLOW ACRYLIC	ABR2
GASKET	40D SILICONE	NONE
ARM/ADAPTOR	6061 ALUM	NONE
HARDWARE	316 SS - EXTERNAL, 18-8 SS - INTERNAL	NONE

TOLERANCES UNLESS OTHERWISE SPECIFIED

MACHINING

X.X 0.0250"
X.XX 0.0100"
X.XXX 0.0050"
X.XXXX 0.0005"
ANGULAR 0.5°
DEBURR ALL

SHEET METAL

HOLE TO HOLE (SAME SURFACE)
X.X 0.030"
X.XX 0.010"
X.XXX 0.005"

HOLE TO FOLDED EDGE
X.X 0.035"
X.XX 0.025"
X.XXX 0.015"

FOLD TO FOLD
X.X 0.045"
X.XX 0.035"
X.XXX 0.020"
ANGULAR 1.0°

THIS PRINT IS THE PROPERTY OF APG VISION LLC. THE INFORMATION CONTAINED HEREIN IS CONFIDENTIAL. IT IS NOT TRANSFERABLE. IT IS FURNISHED WITH THE CLEAR UNDERSTANDING THAT IT IS NOT TO BE TRACED, REPRODUCED OR USED IN ANY PROCESS OF MANUFACTURING WITHOUT WRITTEN PERMISSION FROM THE OWNER AND IS RETURNABLE UPON DEMAND. ANY INFRINGEMENT UPON THE PATENT RIGHTS SHOWN HEREIN, WHETHER IN PART OR WHOLE, WILL BE PROSECUTED.

AS PART OF OUR POLICY OF CONTINUING DEVELOPMENT, APG VISION LLC RESERVES THE RIGHT TO ALTER SPECIFICATIONS WITHOUT PRIOR NOTICE.

APG Vision LLC
4055 Alpha Drive
Allison Park, PA 15101 USA
Phone +1 (412) 487-8211
apgvision.com

DESCRIPTION:
L7 ENCLOSURE WITH REG UPPER, EXTENDED LOWER FOR COGNEX D900 AND MORITEX LENS

MATERIAL: SEE BOM

FINISH: SEE BOM

DRAWN BY:	DATE:	SCALE:	SHT-SIZE:	APPROX. WEIGHT (LBS)
GAS	11/8/2021	1:3	B	6.1594

CHECKED BY:	DATE:	PART NUMBER:	REVISION
DMM	11/8/2021	L7-EB	A

Sheet1 of 2

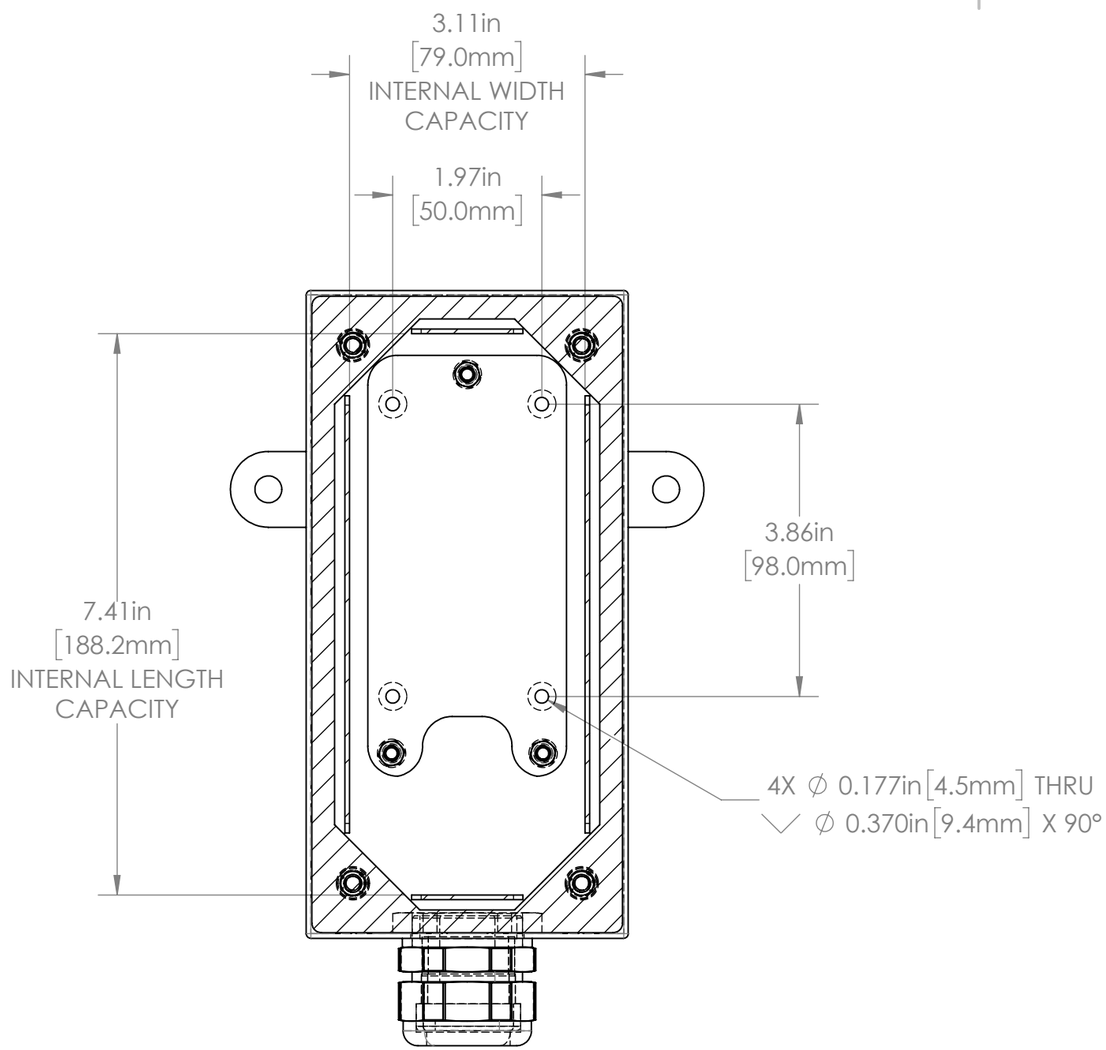

SECTION A-A

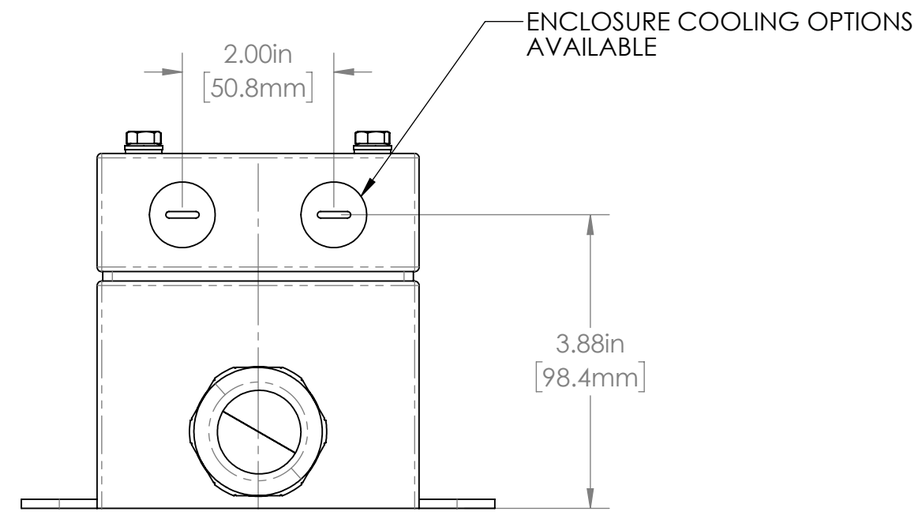

SECTION B-B

TOLERANCES UNLESS OTHERWISE SPECIFIED

MACHINING		SHEET METAL	
X.X	0.0250"	HOLE TO HOLE (SAME SURFACE)	
X.XX	0.0100"	X.X	0.030"
X.XXX	0.0050"	X.XX	0.010"
X.XXXX	0.0005"	X.XXX	0.005"
ANGULAR	0.5°	HOLE TO FOLDED EDGE	
DEBURR ALL		X.X	0.035"
		X.XX	0.025"
		X.XXX	0.015"
		FOLD TO FOLD	
		X.X	0.045"
		X.XX	0.035"
		X.XXX	0.020"
		ANGLULAR	1.0°

THIS PRINT IS THE PROPERTY OF APG VISION LLC. THE INFORMATION CONTAINED HEREIN IS CONFIDENTIAL. IT IS NOT TRANSFERABLE. IT IS FURNISHED WITH THE CLEAR UNDERSTANDING THAT IT IS NOT TO BE TRACED, REPRODUCED OR USED IN ANY PROCESS OF MANUFACTURING WITHOUT WRITTEN PERMISSION FROM THE OWNER AND IS RETURNABLE UPON DEMAND. ANY INFRINGEMENT UPON THE PATENT RIGHTS SHOWN HEREIN, WHETHER IN PART OR WHOLE, WILL BE PROSECUTED.

AS PART OF OUR POLICY OF CONTINUING DEVELOPMENT, APG VISION LLC RESERVES THE RIGHT TO ALTER SPECIFICATIONS WITHOUT PRIOR NOTICE.

APG Vision LLC
4055 Alpha Drive
Allison Park, PA 15101 USA
Phone +1 (412) 487-8211
apgvision.com

DESCRIPTION:
L7 ENCLOSURE WITH REG UPPER, EXTENDED LOWER FOR COGNEX D900 AND MORITEX LENS

MATERIAL: SEE BOM

FINISH: SEE BOM

DRAWN BY:	DATE:	SCALE:	SHT-SIZE:	APPROX. WEIGHT (LBS)
GAS	11/8/2021	1:2	B	6.1594
CHECKED BY:	DATE:	PART NUMBER:		REVISION
DMM	11/8/2021	L7-EB		A

Sheet2 of 2