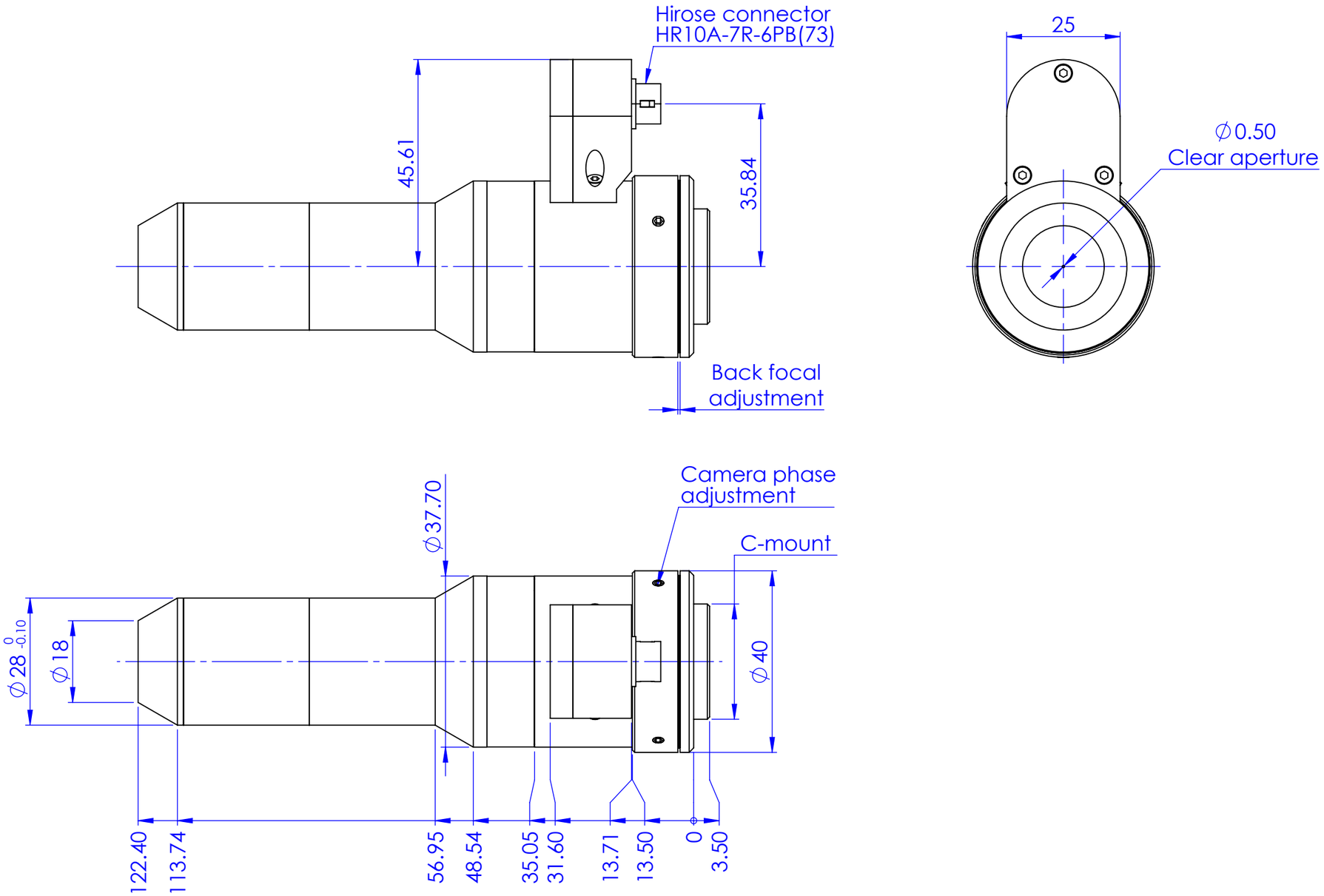


| | | | |
|---|---|---|---|
| Material | N.A. | Mass | 282 g |
| Surface treatment | N.A. | Scale | 1:1 |
| Part No. | CO32273 | | |
| Description | PCHI3M-AF | | |
| Drawing No. | DP 32273-B | Sheet | 1/1 |

| | Class | |
|---|---|---|
| Geometrical tolerance (ISO 2768-2) | K | Undimensioned bevels: 0.5x45° |
| Linear tolerance (ISO 2768-2) | m | Undimensioned radii: R 0.5 |

| 0.5 ÷3 | >3÷ 6 | >6÷ 30 | >30÷ 120 | >120 ÷400 | >400÷ 1000 | >1000 ÷2000 | >2000 ÷4000 |
|---|---|---|---|---|---|---|---|
| ±0.1 | ±0.1 | ±0.2 | ±0.3 | ±0.5 | ±0.8 | ±1.2 | ±2 |

all dimensions are in mm

| | Date | Name |
|---|---|---|
| Designed | 21/01/2015 | Rodella |
| Drawn | 19/07/2022 | Rizzotto |
| Checked | 19/07/2022 | Rizzotto |

OPTO ENGINEERING

OPTO ENGINEERING S.r.l. - Mantova, Italy - Tel. +39 0376699111 - www.opto-e.com

*Secret and confidential - All rights reserved - No copy, dissemination or circulation is allowed unless specifically authorized in writing by OPTO ENGINEERING S.r.l. - Any violation shall be legally prosecuted.*