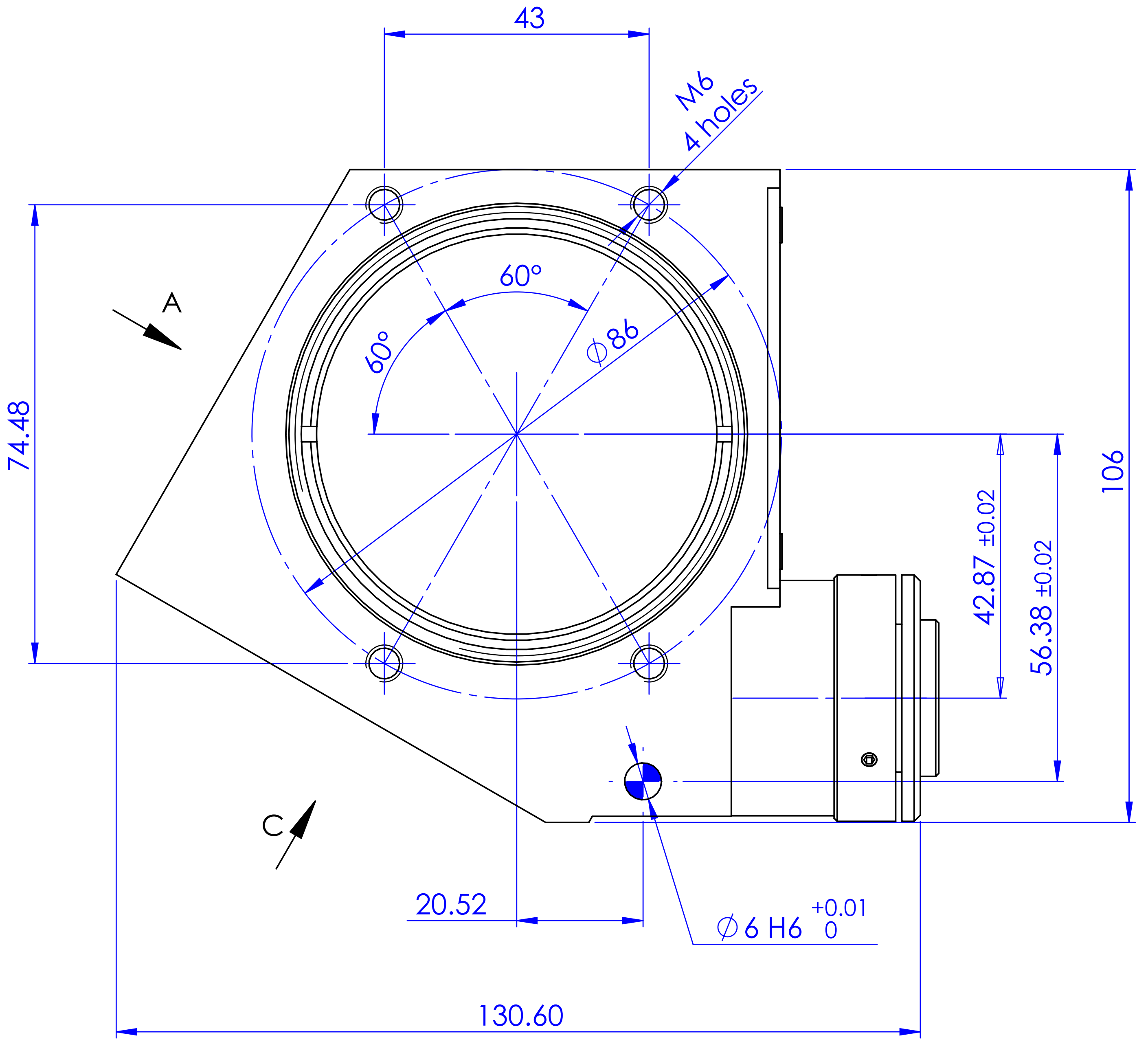

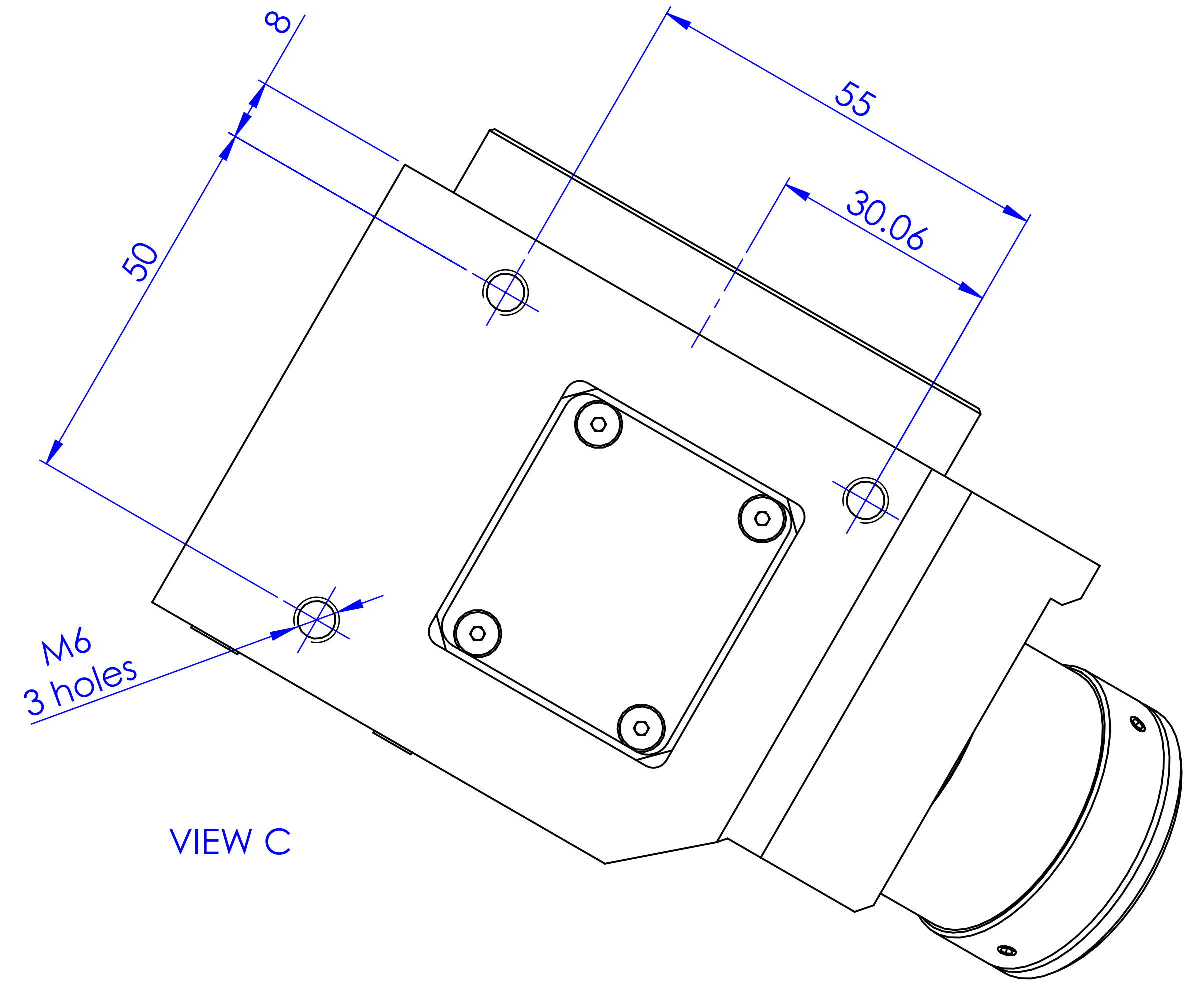

VIEW C

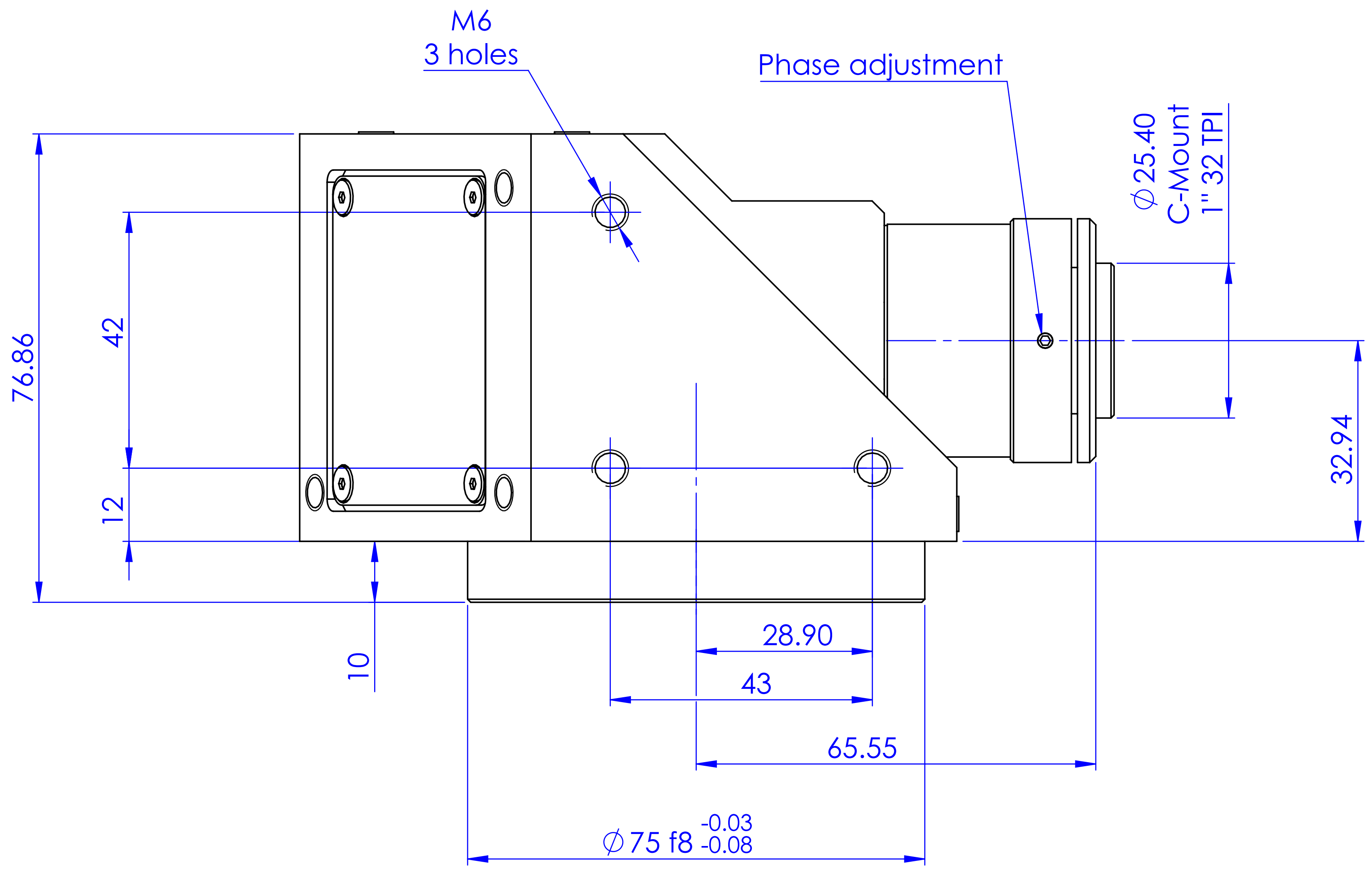

VIEW A

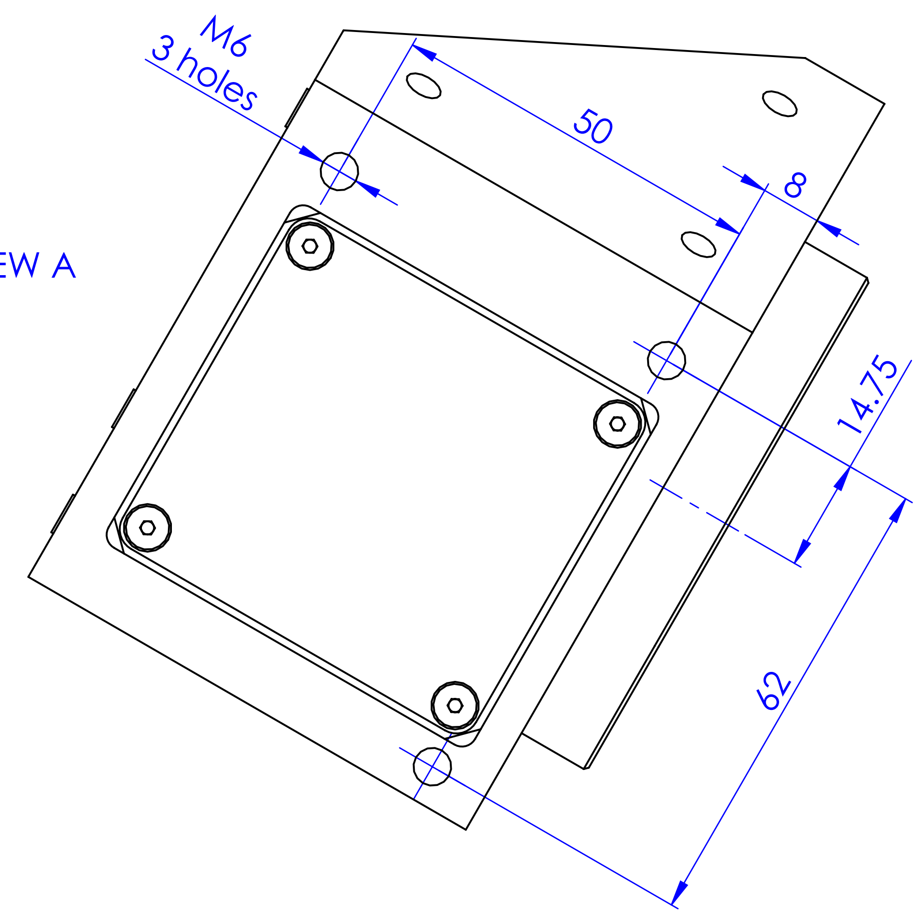

Material	N.A.								Mass 1145 g	Scale 1:1
Surface treatment	N.A.								Part No. CO23939	
Geometrical tolerance (ISO 2768-2)						Class	K	Undimensioned bevels 0.5x45°	Description TCCR23048	
Linear tolerance (ISO 2768-2)						Class	m			
0.5 ÷3	>3÷ 6	>6÷ 30	>30÷ 120	>120 ÷400	>400÷ 1000	>1000 ÷2000	>2000 ÷4000	Undimensioned radii R 0.5		
±0.1	±0.1	±0.2	±0.3	±0.5	±0.8	±1.2	±2			

all dimensions are in mm

OPTO ENGINEERING

	Date	Name
Designed	04/03/2015	Vasconetto
Drawn	16/07/2015	Rodella
Checked		

Drawing No. DP 23939-C

Sheet 1/1

Secret and confidential - All rights reserved - No copy, dissemination or circulation is allowed unless specifically authorized in writing by OPTO ENGINEERING S.r.l. - Any violation shall be legally prosecuted.

OPTO ENGINEERING S.r.l. - Mantova, Italy - Tel. +39 0376699111 - www.opto-e.com