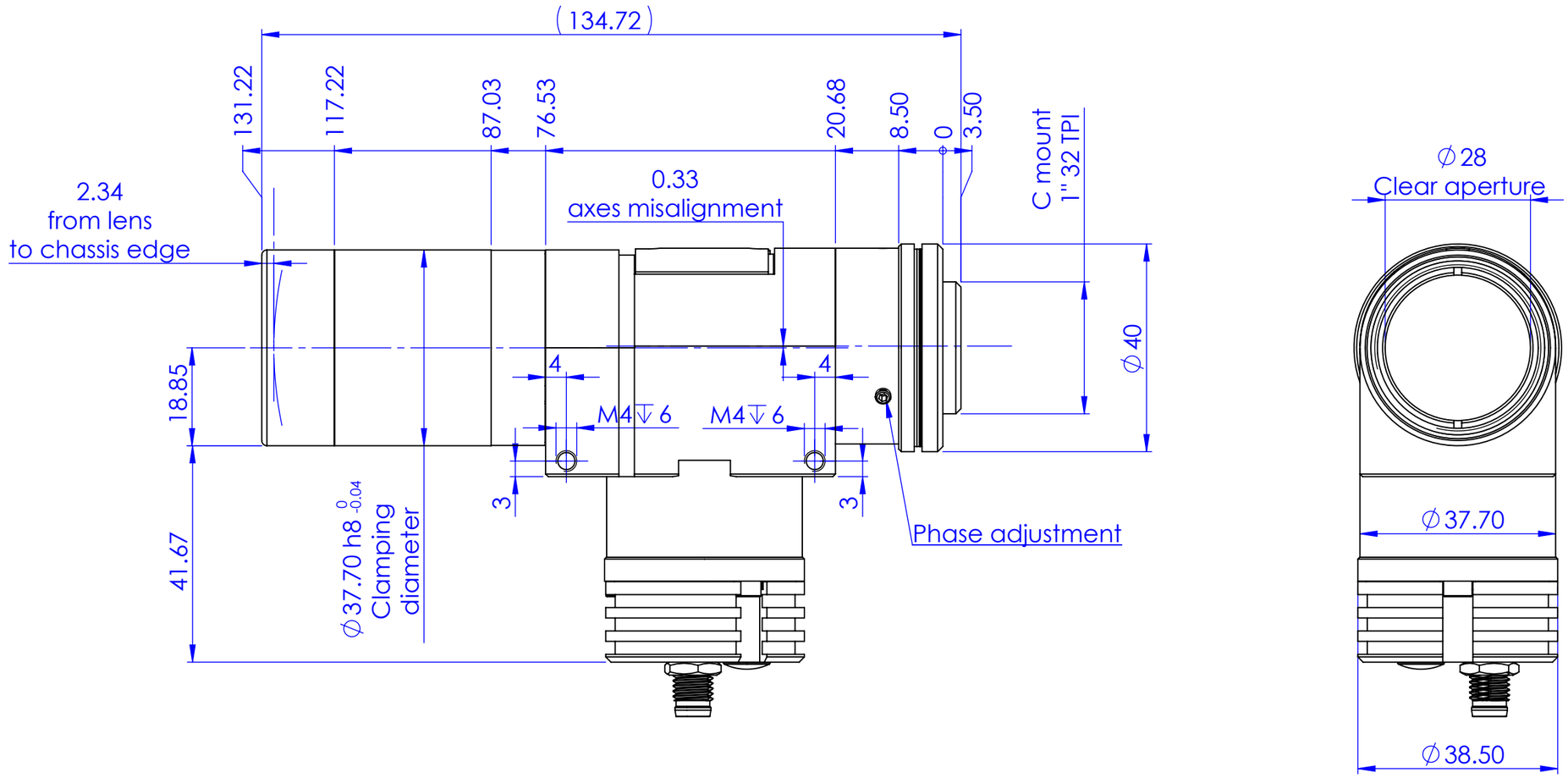

Material	N.A.								Mass	450 g
Surface treatment	N.A.								Scale	1:1
Part No.	CO22258									
Geometrical tolerance (ISO 2768-2)							Class	K	Undimensioned bevels	0.5x45°
Linear tolerance (ISO 2768-2)							Class	m		
0.5 ÷3	>3÷ 6	>6÷ 30	>30÷ 120	>120 ÷400	>400÷ 1000	>1000 ÷2000	>2000 ÷4000		Undimensioned radii	R 0.5
±0.1	±0.1	±0.2	±0.3	±0.5	±0.8	±1.2	±2			

Description: TCCX 050-G

all dimensions are in mm

	Date	Name
Designed	04/04/2014	Santini
Drawn	04/04/2014	Santini
Checked		

Drawing No. DP 22258-C

Sheet 1/1

OPTO ENGINEERING

OPTO ENGINEERING S.r.l. - Mantova, Italy - Tel. +39 0376699111 - www.opto-e.com

Secret and confidential - All rights reserved - No copy, dissemination or circulation is allowed unless specifically authorized in writing by OPTO ENGINEERING S.r.l. - Any violation shall be legally prosecuted.